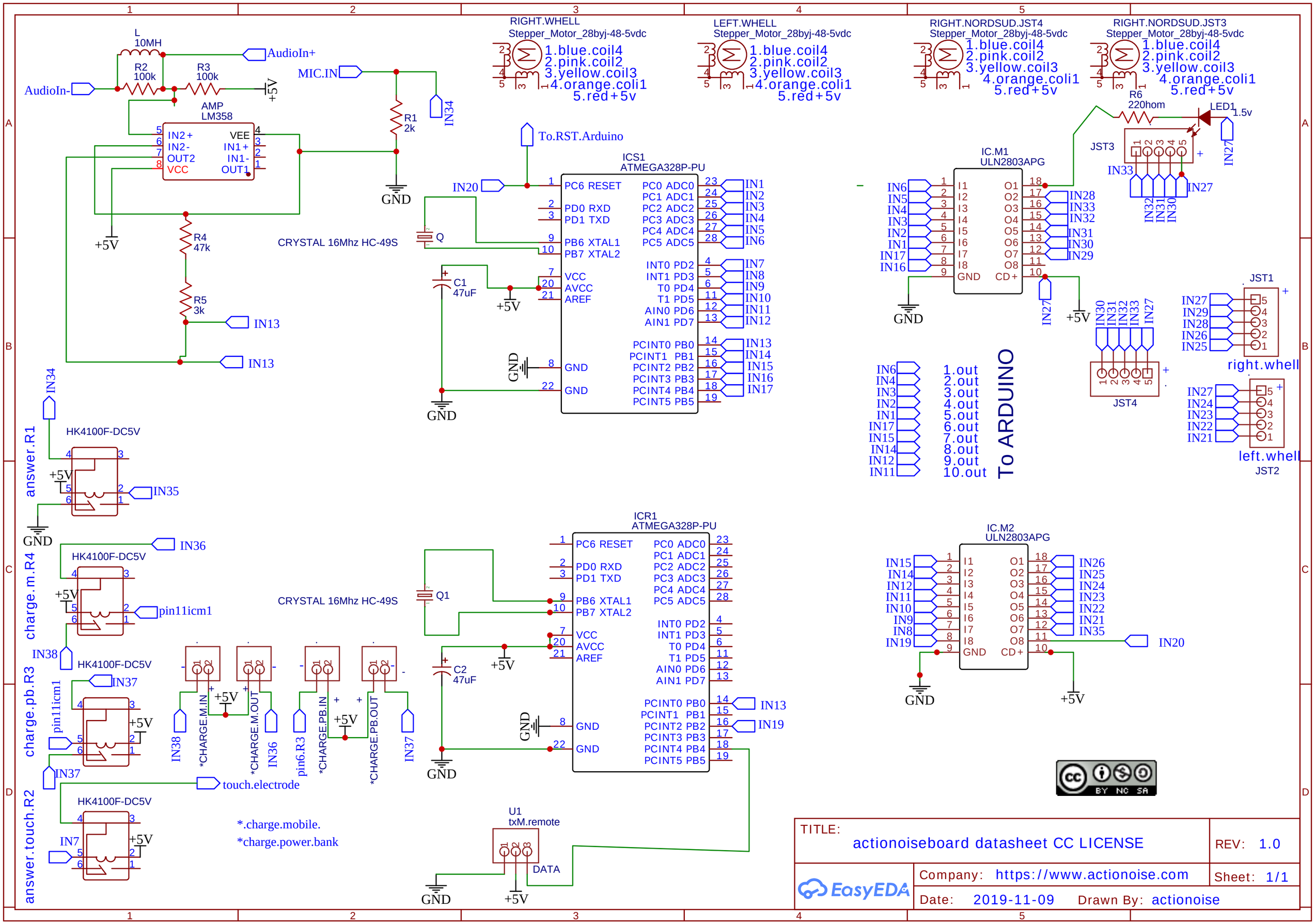

TITLE: actionoiseboard datasheet CC LICENSE	REV: 1.0
EasyEDA — Company: https://www.actionoise.com	Sheet: 1/1
Date: 2019-11-09 — Drawn By: actionoise	