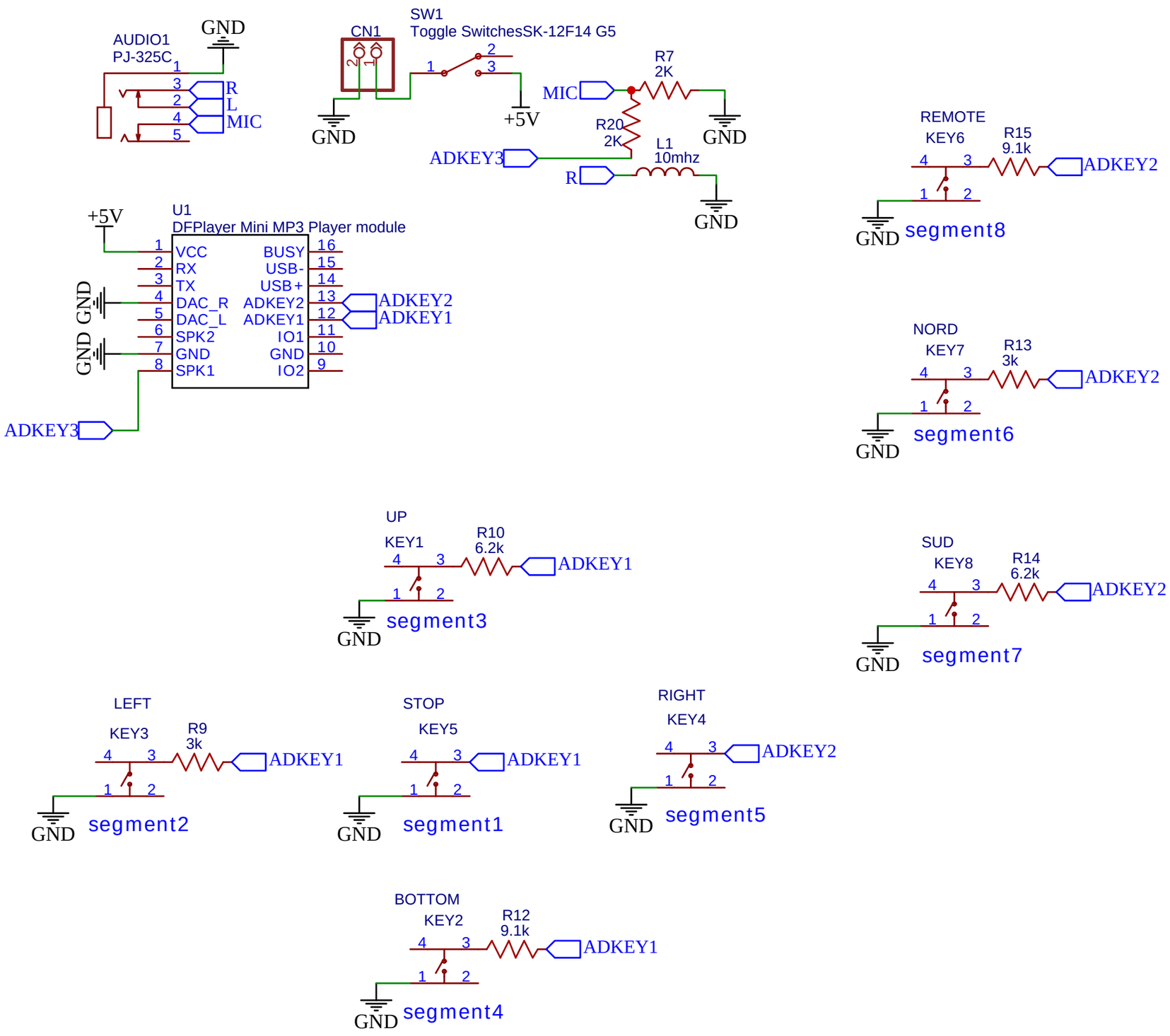

TITLE: PlayPad Actionoise.com		REV: 1.0
	Company:	Sheet: 1/1
	Date: 2019-12-10 Drawn By: Harsh Dethe	